PPF40RC-HP/PCC30RC-HP Instructions rev 422

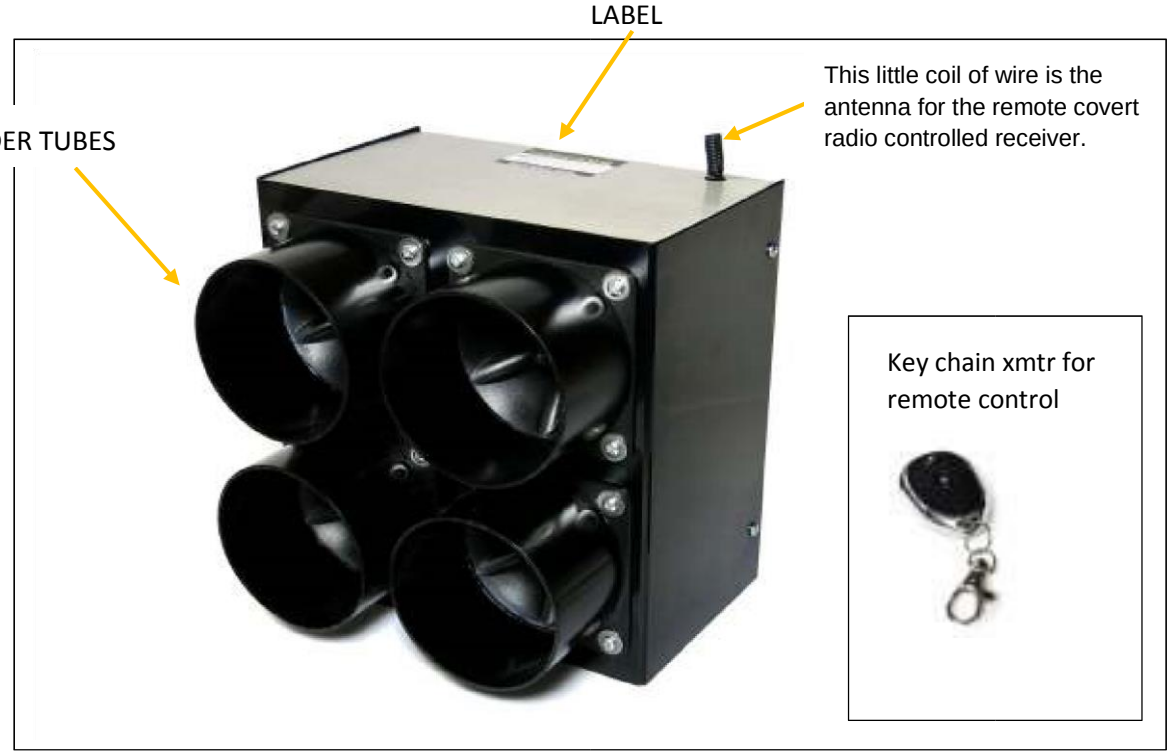

Wireless Remote is used for covert control from a safe distance

Manual control plug must be removed for wireless remote to work).

Frequency control switch must be on and set for intended target.

Mode 1 is at a frequency that is known to produce paranoia, nausea, disorientation and other physiological effects. It is just above audible to 23 kHz.

The effects may take longer but are more covert than mode 2

Mode 2 is our newly added SHRIEKER function allowing using the system as an audible alarm to frighten off intruders or warn the user of an intrusion.

Both modes may be used in combination and are easily pre-adjusted from the front panel by the user.

You will see several notes in yellow text on black, please read as they are important

General Information on Operation

The instrument is a multifunctional protective device producing directional piercing and high levels of longitudinal compressional sonic waves at SPL of >130 db measured at 1m- Observe label. These conditioned sonic waves produce painful, nauseating, disorientating, paranoia, and other deleterious effects. ***The device can help avoid unwanted confrontations and home intrusions*** yet is not life threatening. It can be used for keeping most unwanted four-legged creatures from ravaging gardens, ornamentals etc.

Basically, the unit produces a wide band of frequencies ranging into the high audible to the ultrasonic. Most people will hear or feel or become nauseous, lightheaded, dizzy or just plain uncomfortable and find the output intolerable to be around. Not all people or animals are alike and you will find some will be affected far more than others.

Successful performance of this instrument will require you to learn the functions of the controls their limitations and their effects and settings for producing optimum effects on selected targets. Range can be 25 feet out to 200 feet depending on target sensitivity. NOTE: Unfortunately, the sensitivity curve shows younger women are the most effected while older men the least!

The unit has settings that range from 5 kHz to 24 kHz. These settings are stable and will perform different functions on different targets. Most humans will not hear above 18 kHz, but will feel the effect over a period. As you decrease the frequency people will start to hear it, as well as feel it's and it is the discretion of the user along with the effect on his target where he adjusted his settings.

The unit also has a ***sweep control*** function. Now the sweep control function produces both audible and ultrasound frequencies so you may be hearing audible tones as well as ultrasonic as the unit sweeps to lower frequencies than **the frequency range adjust is set to.** The sweep control also has a rate control, which simply speeds up or slowdowns the changing frequencies from the ultrasonic to the audible range. As you can see these many functions and settings sometimes require the user to find ***a sweet spot*** meaning most effective settings that affect his target.

Addendum Notes

Unit may be used to protect gardens and ornamentals from unwanted four leg pests, bark control, for control of predators raiding bird feeders

Great fun for flushing out rats from dumps, silage bins, granaries, chicken houses etc. You may want to have a .22 or .410 ready!

You'll see a photograph of the rear panel and all the controls and jacks and a description of each one. We have not labeled the rear of the unit as many people consider that better security when it is unlabeled. The photograph will give you a clear picture of the controls. Eventually you should get used to them without consulting the instructions.

The internal batteries are used where normal power is unavailable. They are limited to 8 amp hours and intended for emergencies where normal power is not available. They will provide up to 8 hrs of continued use-

INTERESTING NOTE!

Your **ultra-sonic acoustical generator** is intended for use as a security or property protection device but be aware certain states do not allow the use of any device that may discourage or impede any criminal activity, claiming such use is a violation of the law-breakers civil rights. You may check with the proper authorities before installing this device with the intent of discouraging illegal entry or protection of your family, home or property.

We have been alerted that use in MASS, NYC, and WASH DC may require licensing restrictions in the future when used for security or property protection involving a possible violation of the law breakers rights!

The user may choose to do his labeling using the instructions and a suitable marking

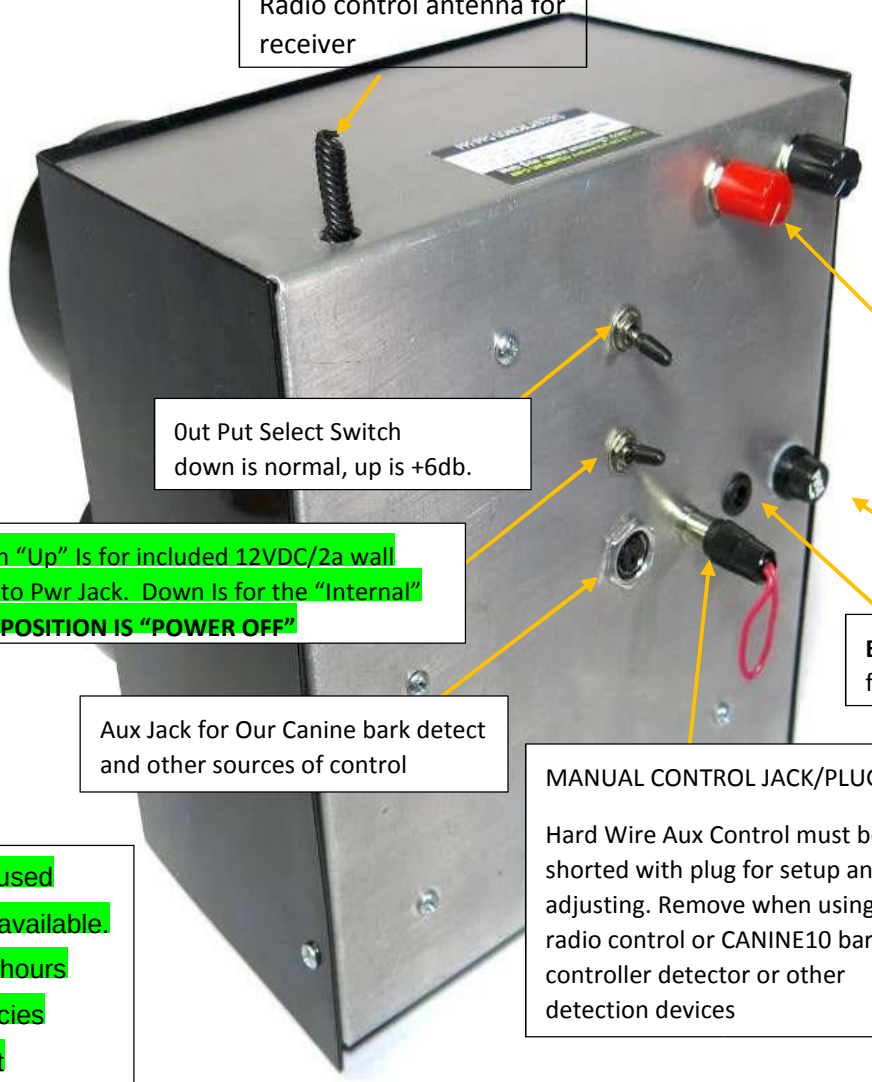

Radio control antenna for receiver

Wireless Remote is used for control from a safe covert distance

Frequency control switch must be on and set for intended target.

Manual control plug must be removed for wireless remote or **CANINE BARK DETECTOR** to work).

Sweep Rate and Sweep On/Off

Off/click On and **Freq Range** will be audible at 5 khz . As control knob is turned CW Freq will increase to ultrasonic 24 khz

0ut Put Select Switch down is normal, up is +6db.

Power Select Switch "Up" Is for included 12VDC/2a wall adapter plugging into Pwr Jack. Down Is for the "Internal" Batteries. **CENTER POSITION IS "POWER OFF"**

Fuse 3amp

Ext Pwr 2.5mm Jack for 12/2A DC

Aux Jack for Our Canine bark detect and other sources of control

MANUAL CONTROL JACK/PLUG

Hard Wire Aux Control must be shorted with plug for setup and adjusting. Remove when using radio control or CANINE10 bark controller detector or other detection devices

Key chain xmtr for remote control

The internal batteries are used where normal power is unavailable. They are limited to 8 amp hours and intended for emergencies where normal power is not available. They will provide up to 8 hrs of continued use-

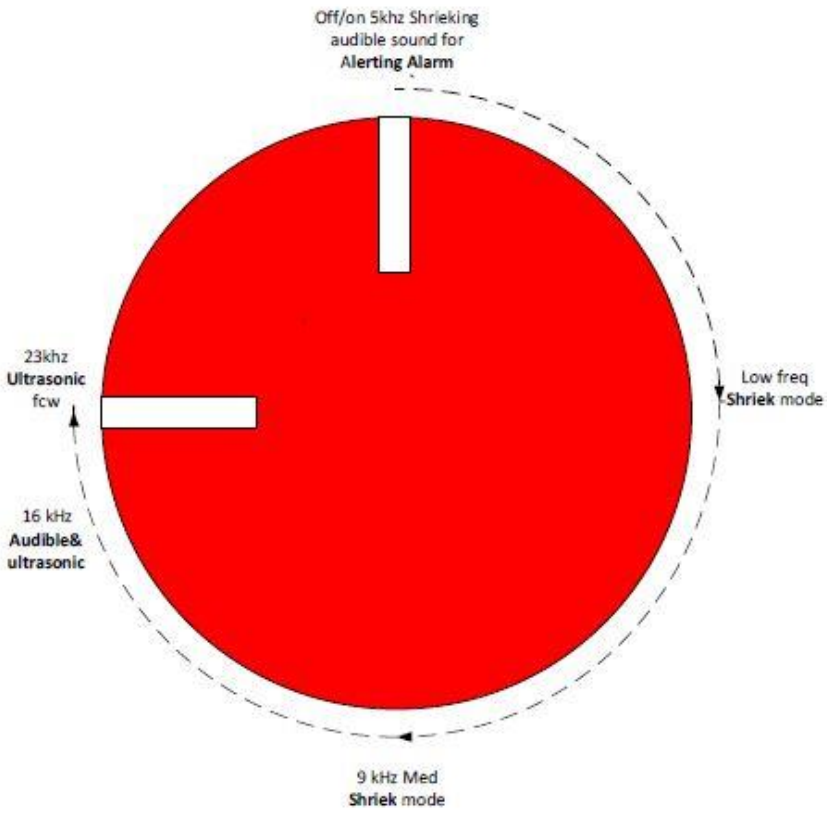

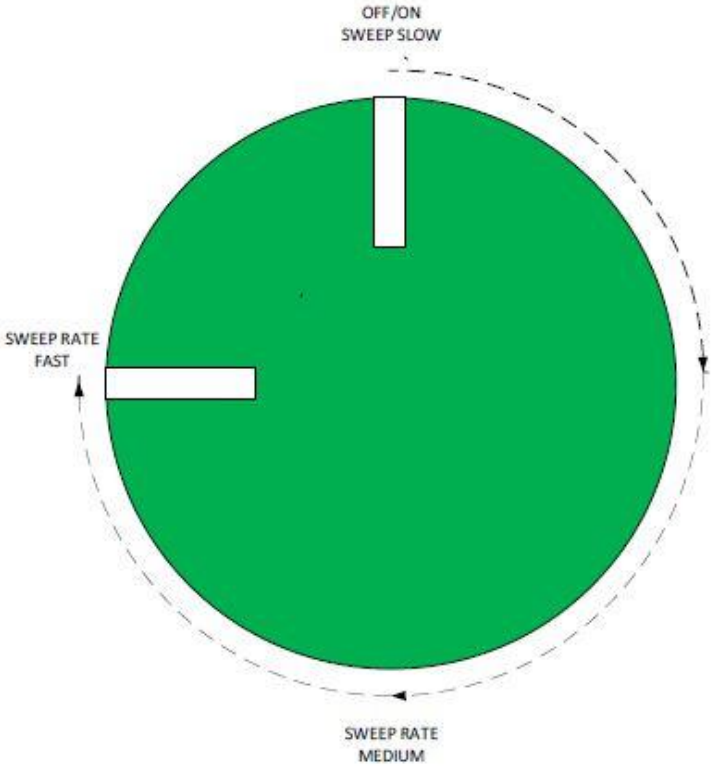

UNPACKAGING

- Check the unit over for any damage that could have occurred during shipping or otherwise.
- Verify all knobs are fully counterclockwise and off as noted by the click of the switch knob. Both toggle switches levers down
- Verify **Hard Wire Aux Control plug** is inserted into jack and remove the **RC controller** as is shipped being held in place by lead wired to plug

SELECT POWER SOURCE of INTERNAL BATTERIES OR EXTERNAL 12 V INPUT** The lower ***switch is in the up position if you use the plug-in the ***wall adapter*** that was supplied with the unit for power. When it is in the down position you are powering the unit from the ***internal batteries***. You will note some switches have a middle position this is no function at all and the switch should be either in the up or down position.

INSTALLATION OF INTERNAL BATTERIES

Carefully remove the front section that the 4 transducers are mounted to via screws. Note inter connecting wire leads.

Insert eight fresh Duracell's or alkaline C size batteries and note proper contact of the batteries with each other and the connections to the terminals on the two holders. Carefully re-assemble

CONTROLS DESCRIPTION, FUNCTIONS and ADJUSTMENTS

FREQ RANGE FUNCTION

is for manually turning the unit on and presetting the output from an audible of 5khz to inaudible up to 24khz ultrasonic range.

This control also applies power to the unit fully activating all controls **when first clicked on**

FREQUENCY RANGE ADJUSTMENTS

- Click on **FREQ ADJ** knob. Do not adjust control currently
- You will hear a piercing audible 5 kHz tone.
- Slowly rotate the **FREQ ADJ** control clockwise and note frequency getting higher and higher until you cannot hear it anymore, but eventually will feel it as a pressure. **If you are acoustically sensitive and inside a room you may hear the high setting**
- Adjust **FREQ ADJ** control fully clockwise the frequency will be 23 to 24 kHz. **Sensitive ears may hear at close range.**
- Slowly rotate the **FREQ ADJ** control counterclockwise to a frequency you can just start to hear.
- To deactivate unit, rotate **FREQ ADJ** control fully counterclockwise to click off.

SWEEP RANGE FUNCTION

1. is for manually turning the **SWEEP** on/off. As you rotate this control it will click on and allow you to change the rate of the sweep of the selected frequency as control is rotated.

SWEEP RATE RANGE ADJUSTMENTS

- This control is for adjusting the rate of the changing freq from audible to inaudible ultrasound. Adjustment can be a rapid rate like chirping sound to a slow sickening rate of 5 seconds. Note that sweep range may be both audible at the low end to inaudible ultrasound at the high end. Sweep is disabled by clicking the switch in the FCCW position of this control.

NOTE: operating at the lower frequency limits in the SWEEP MODE may cause erroneous output and should be avoided

When you activate the ***SWEEP FUNCTION*** the frequency now drops down from the as set by the ***FREQUENCY ADJUST CONTROL***.
The sweep rate of the frequencies that are being swept will vary depending on where the frequency adjust is set. **Example: if you turn THE *FREQUENCY ADJUST CONTROL* full clockwise, that is the highest ultrasonic frequency of the unit. The sweep rate of the sweep range will start from that frequency of 24 kHz and change eventually reaching a lower frequency that could be audible to some people.** The ***SWEEP RATE CONTROL*** just changes the time it takes for the output frequency to change from the highest setting to the lowest setting.

As the ***FREQUENCY ADJUST CONTROL*** is set lower, the sweep will always start from that lower frequency setting and even go lower. Y*ou will be very much in the audible range if you were able to hear reasonably high frequencies as most younger people are.*

The best approach with a unit like this, where most users are unfamiliar with is to do a little experimenting. This will give you an idea of how the unit should be set for your application at the same time observing the effect on the target.

The combinations of setting for these devices is almost unlimited.
The rate of this change is adjustable by the ***SWEEP RATE CONTROL*** and can enhances the effectiveness of the unit in many applications. You may find however that the ***sweep*** may not be required and be disabled by simply clicking the ***control off.***
This allows a steady tone as set by the ***FREQUENCY ADJUST CONTROL***

When you use the unit in the sweep position the whole objective is you scan the frequency of the unit from the high ultrasonic into the high audible or go lower where you can scan a shrieking high sound pressure (SPL) audible sound. The scanning mode in most cases should not be used if it's going to be around those who are very sensitive to high-frequency hearing as they could be bothered by it.

SETUP INSTRUCTIONS

IT IS ASSUMED YOU HAVE READ THE ABOVE DATA ON THE VARIOUS FUNCTIONS AND ADJUSTMENTS

You'll see a photograph of the rear panel and all the controls and jacks and a description of each one. We have not labeled the rear of the unit will as many people seem to consider that better security when it is unlabeled. However, the photograph will give you a clear picture of what the controls are and eventually you should get used to them without consulting the instructions.

DETERMINE POWER REQUIREMENTS - "Internal" alkaline batteries will provide above 6 hrs. of use, but cannot be recharged. Ni- Cads will provide about 2-1/2 to 3 hours but can be recharged. An "External" supply can be provided by a 12 VDC 2-amp regulated wall adapter or external 12V battery.

- **12 V POWER INPUT** • is intended for the regulated wall adapter included with the unit. It mates with the input Jack and allows you to operate the unit without batteries, however it must be plugged into an accessible 115 V outlet.
- **BATTERY OPERATION** will involve taking off the cover, and inserting the non-rechargeable 8 C cells that will provide you 6-8 hours of continuous use before they need to be replaced. If you decide you need rechargeable batteries contact the factory and we will set you up with a charger and a battery of the amp power capacity that you require.

WIRELESS REMOTE CONTROL **Radio controlled operation via the handheld *wireless remote* transmitter allowing control of the system up to *300 feet also requires the *shorted mating plug* to be removed. *300 feet is outside with no obstruction***

When used with our canine controller **bark detector trigger jack** or other external trigger input, the ***shorted mating plug*** must be removed.

1. This device has all transducers, directed to the same area where protection against unauthorized intrusion is desired. This enhances the effect in a concentrated area.

- ***If you activate this unit inside, you may hear all ranges if your hearing is exceptional good. Perform following tests with hearing protection or outside to avoid return reflections from walls etc***
- Dogs seem to be affected just above that of human hearing...usually starting at 18 kHz. Animal pests usually 20 plus kHz
- Note human sensitivity is maximum on younger females and less on older males. This advantage is used to discourage unwanted teenage gatherings in front of stores or other sensitive areas

3 Many users have reported back that best results were obtained by setting the frequency of the pain field right at the point of human hearing when you are close to it and this seems to be the best effect from what we understand in these reports

4. Adjust controls for maximized effect to target subject - experiment for optimum results.

You may weatherproof your unit and at the same time provide a little bit of camouflage by simply getting a heavy suitable colored plastic bag and, putting the unit in it. Cut holes so the transducer tubes protrude. Use waterproof and tape the bag into place using your own ingenuity. It is a good idea to position transducers towards the ground at a very slight angle so water will not accumulate in the tube. In most cases this is not a problem

NOTES

There have been numerous requests for information on the effect of these devices on people. These units are used to debilitate, incapacitate and intimidate by providing a feeling of nausea, uncomfortability and extreme paranoia in people. Both the Israeli and U.S. govt are using for non- lethal crowd control

None of these sonic devices have the ability to stop a person with the same effect as a gun, club or more conventional weapon*. They will, however, produce an extremely uncomfortable, irritating and even painful effect in most people. Not everyone experiences this effect to the same degree. Unfortunately, younger women are much more affected than older men due to being more acoustically sensitive.

The range of the devices depends on many variables and is normally somewhere between 25 and 200 feet again dependent on target sensitivity.

When all transducers are directed to a sensitive area where protection against unauthorized intrusion is important, a very painful feeling is experienced by the intruder, along with a condition of paranoia from not knowing what to expect next.

The range of the devices depends on many variables and is normally somewhere between 25 and 200 feet again dependent on target sensitivity.

***In certain situations deadly force backup may be necessary*.**

PCC30 ADDENDUM INSTRUCTIONS

If you have purchased the PCC 30 you may use these instructions for operation, set up and all functions. It is basically two of the PPF 40's installed in a larger enclosure. The advantages of the two units is obvious as you can run them at the same frequency with twice the output power

The photo shows the PCC 30 unit with identification of all controls where one can see it is nothing more than two PPF 40s built into a larger enclosure. All functions as noted in the PPF40s may be applied in the adjustment and use of the PCC 30. Obviously the power required is doubled and the included power adapter allows for this. Internal batteries will require more frequent recharging or replacing.

Your Phasor Pain field System is capable of operating in two modes. Mode 1 is at a frequency that is known to produce paranoia, nausea, disorientation and other physiological effects. Mode 2 allows using the system as an audible alarm to frighten off intruders or warn the user of an intrusion. Both modes may be used in combination and are easily controlled from the front panel by the user.
You'll see a photograph of the rear panel and all the controls and jacks and a description of the of each one. We have not labeled the rear of the unit will as many people seem to consider that better security when it is unlabeled. However the photograph will give you a clear picture of the controls and eventually you should get used to them without consulting the instructions

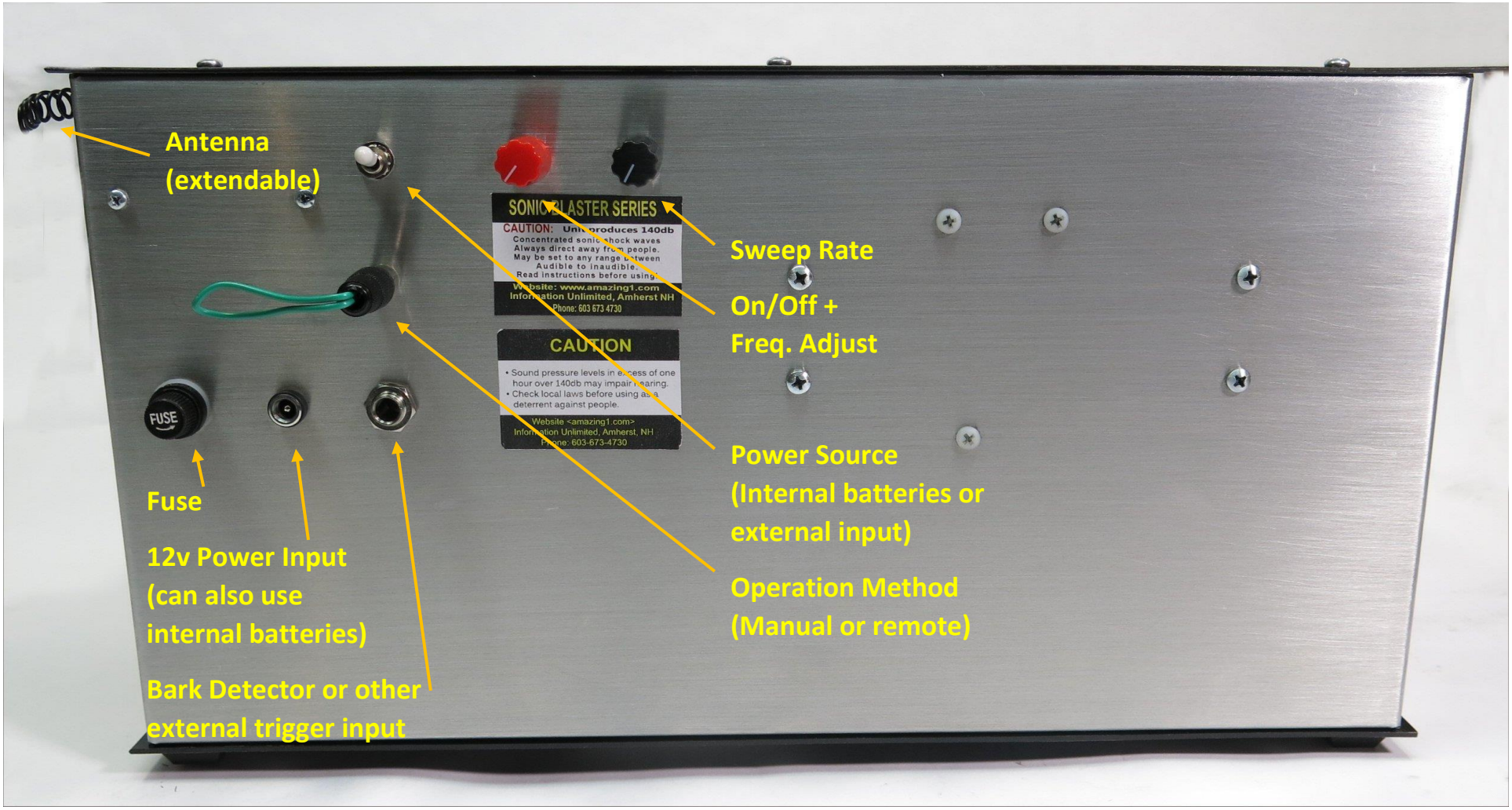

Wireless Remote is used for control from a safe distance

Frequency control switch must be on and set for intended target.

Manual control plug must be removed for wireless remote to work).

INSTRUCTIONS TO RECODE TRANSMITTER TO RECEVER

REMOTE RECIEVER

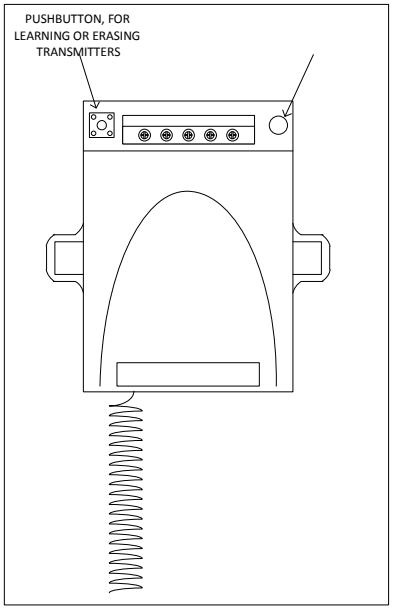

If you should encounter any difficulties with your remote transmitter not working, it may be due to the receiver not recognizing the transmitter:

1. Make sure the power switch for the PPF/PCC is in the OFF position.
2. Remove the cover for the PPF/PCC.
3. Connect the power cord and plug into wall/ insert batteries in the battery holder.
4. Make sure power source select switch is in the correct position for what you are using (internal batteries or external power).
5. Push the remote transmitter's ON button for one second then push the OFF button for one second. (Check that remote indicator light turns on for each button push. If light does not turn on and you do not hear the relay click, go to next step. If light does turn on and you do not hear the relay click, call us for further help.)
6. Hold the remote receiver's push button for 1- 3 seconds until indicator illuminates, release button and light will then start blinking slowly.
7. Press either button on remote transmitter. The indicator light on the receiver will go out.
8. Press either button on remote transmitter again. The receiver indicator light should blink rapidly to show that it has learned the remote

REMOTE TRANSMITTER

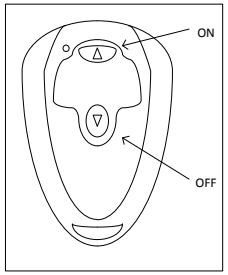

9. Press the remote transmitter's OFF button.
10. Make sure that remote jack is disconnected from the unit.
11. Turn PPF/PCC power switch ON.
12. Press the remote transmitter's ON button. Device should generate loud noise.
13. Press the remote transmitter's OFF button. Loud noise should stop.
14. Turn PPF/PCC power switch OFF.
15. Remove power cord from PPF/PCC.
16. Reinstall cover for PPF/PCC.
17. Your PPF/PCC is now ready for normal operation.

NOMINAL POWER, IMPEDANCE, AND DISTORTION RATINGS

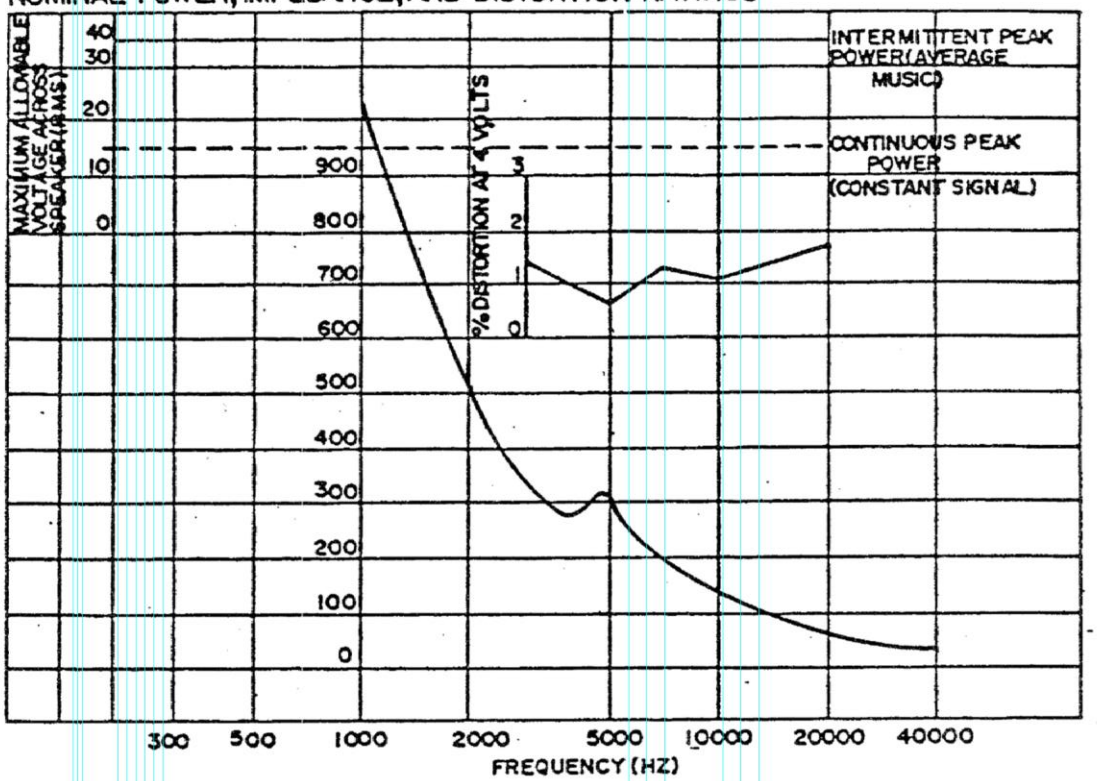

FREQUENCY RESPONSE

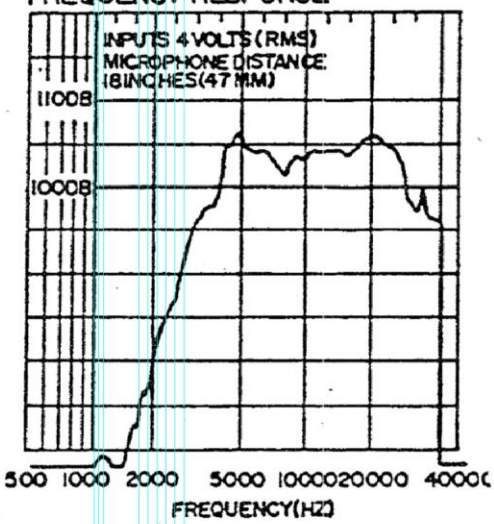

CAUTION

Sound pressure levels in excess of one hour over 105db may impair hearing. These units produce over 120db@30cm Check local laws before using device as a deterrent against people

Web Site <www.amazing1.com>
INFO UNLIMITED Amherst N.H. 603-673 4730

FIG 9

TDI TRANSDUCER SPECS AND CURVES MODEL #6001

DETECTION FUNCTION SCHEMATIC

FIG 10

5

SOUND PRESSURE CHART

EAR DAMAGE	160 db	EXPLOSION, SHELL GRENADES, OUTSIDE DESTRUCTIVE SHOCK-WAVE RADIUS
	150 db	
	140db	M16 AUTO RIFLE DOWN RANGE 10'
	130 db	THRESHOLD OF PAIN
PAIN		
	120db	PPG1 TO INTRUDERS
	110db	CIRCULAR SAW, FIRE SIREN
	100db	SUBWAY STATION THUNDER
VERY LOUD ANNOYING	90db	BELT SANDER, VACUM CLEANER
	80 db	NORMAL CITY STREET
	70db	PHONE RING AT 6' NORMAL SPEECH
COMFORTABLE	60db	AIR CONDITIONER
	50db	WINDOW FAN
	40db	NORMAL OFFICE
QUIET	30db	LIGHT BREEZE
	20db	RECORDING STUDIO
VERY QUIET	10 db	LOW WHISPER
	0db	THRESHOLD OF EAR FOR HEARING

SOUND PRESSURE INTENSITY CHART

DB RATINGS TAKEN AT 18" FROM SO
UNLESS OTHERWISE NOTED.

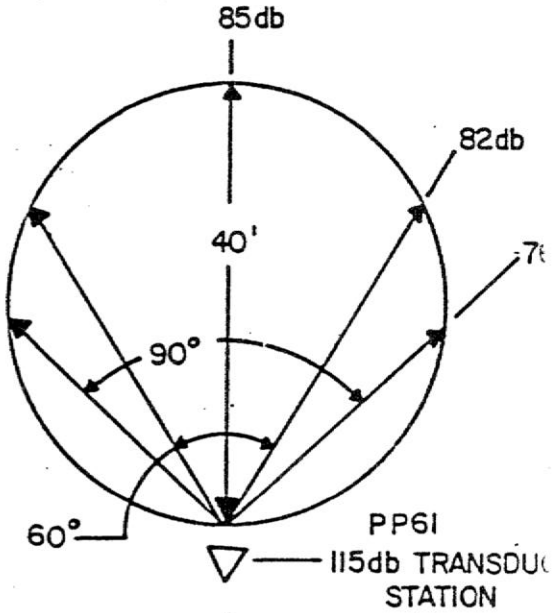

RADIATION PATTERN, SCALE 2.5" = 40'
USE A LAYOUT TEMPLATE